Copyright Bondtech AB

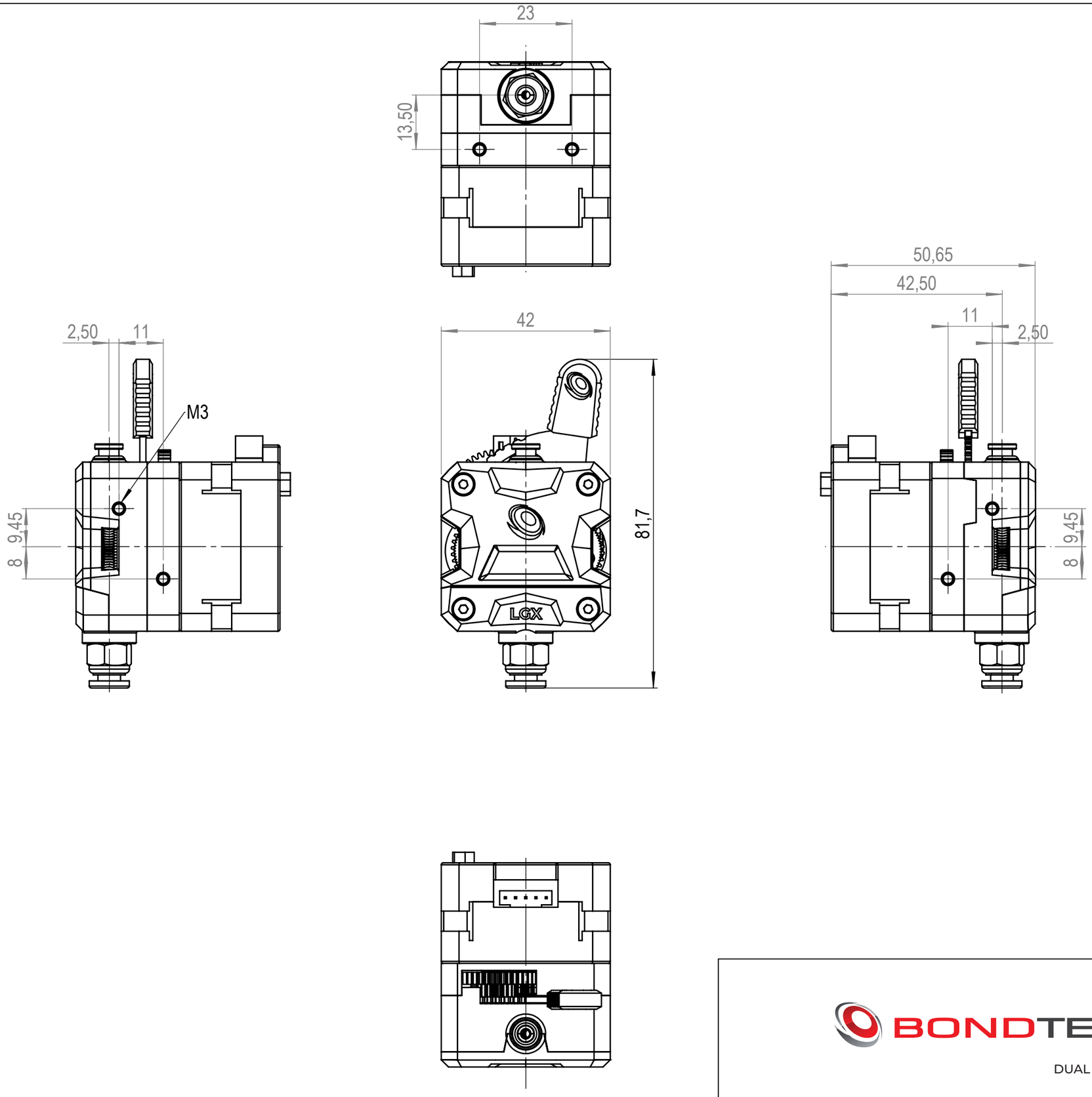

BONDTECH LGX™

DUAL DRIVE TECHNOLOGY **EVOLVED**

Copyright Bondtech AB

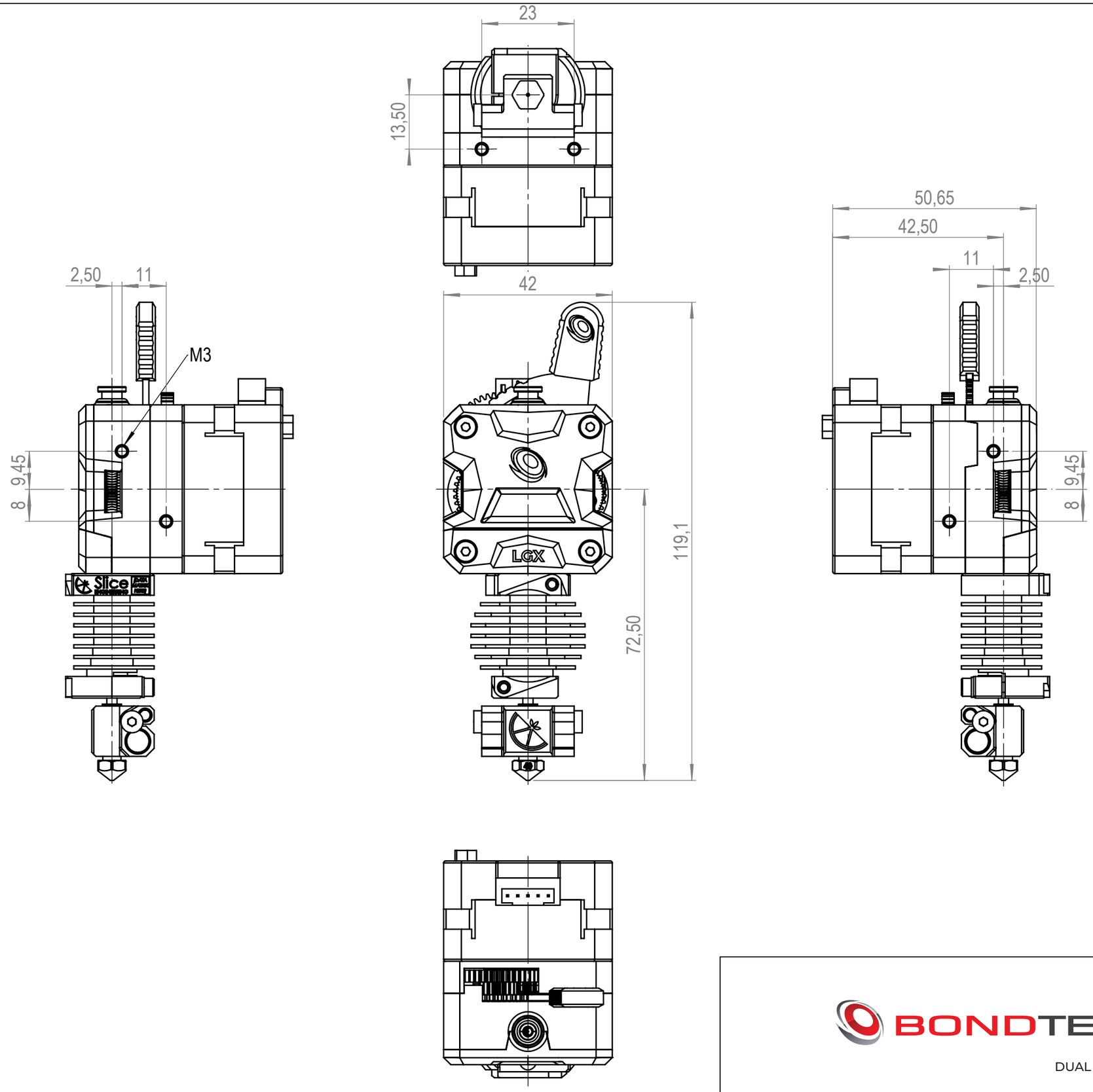

BONDTECH LGX™

DUAL DRIVE TECHNOLOGY **EVOLVED**

Copyright Bondtech AB

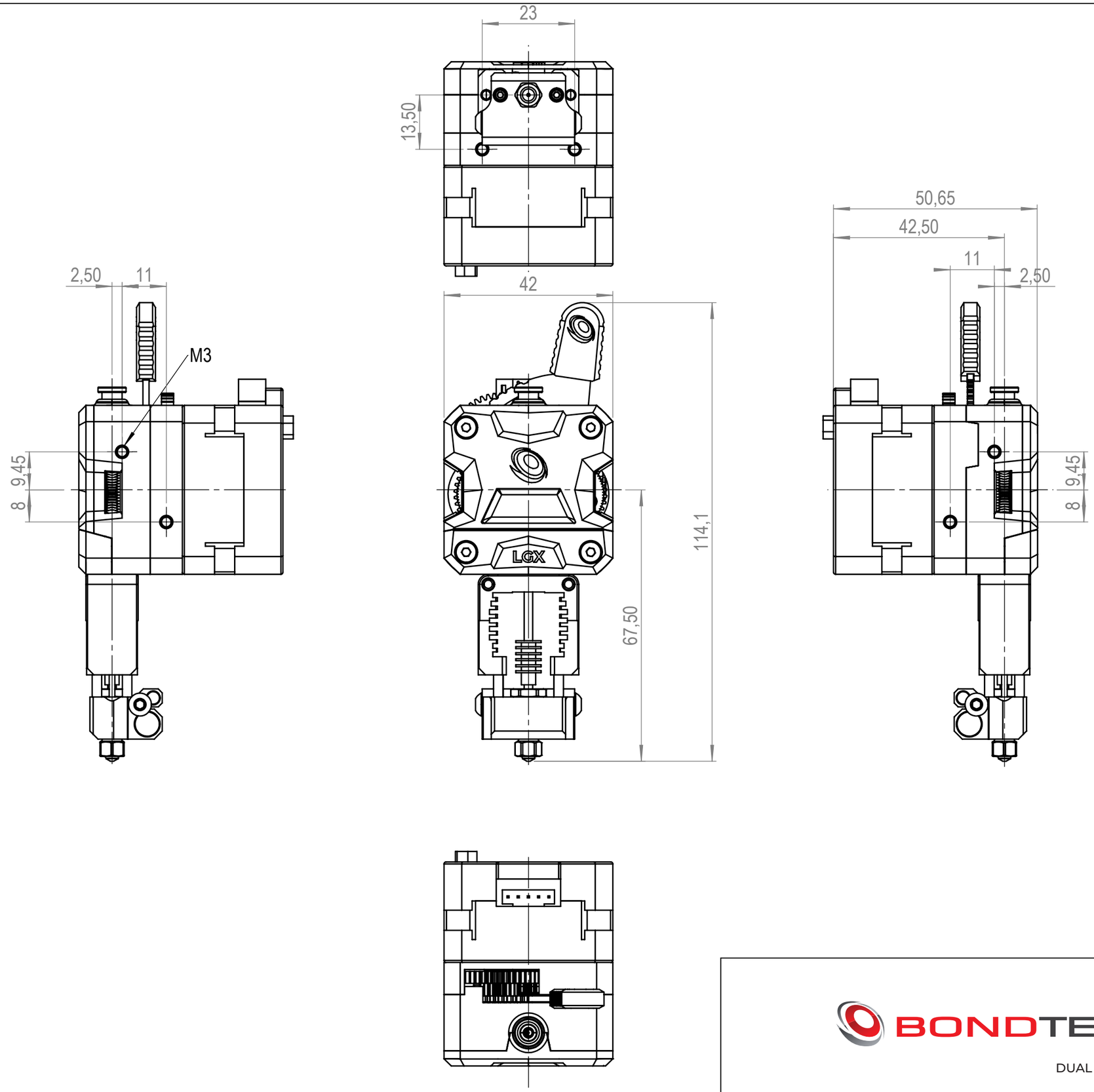

BONDTECH LGX™

DUAL DRIVE TECHNOLOGY **EVOLVED**

Copyright Bondtech AB

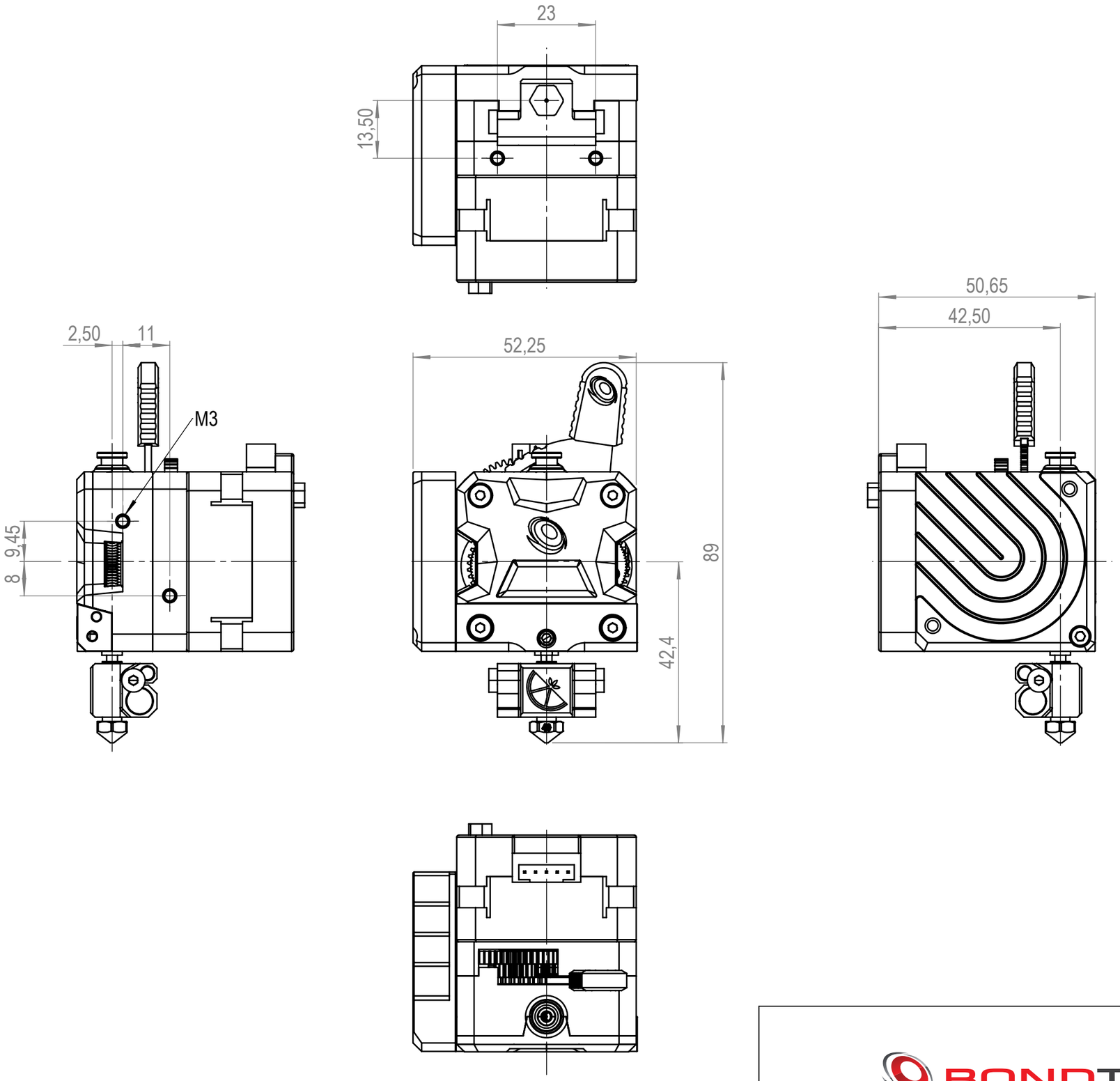

BONDTECH LGX™

DUAL DRIVE TECHNOLOGY **EVOLVED**

Copyright Bondtech AB

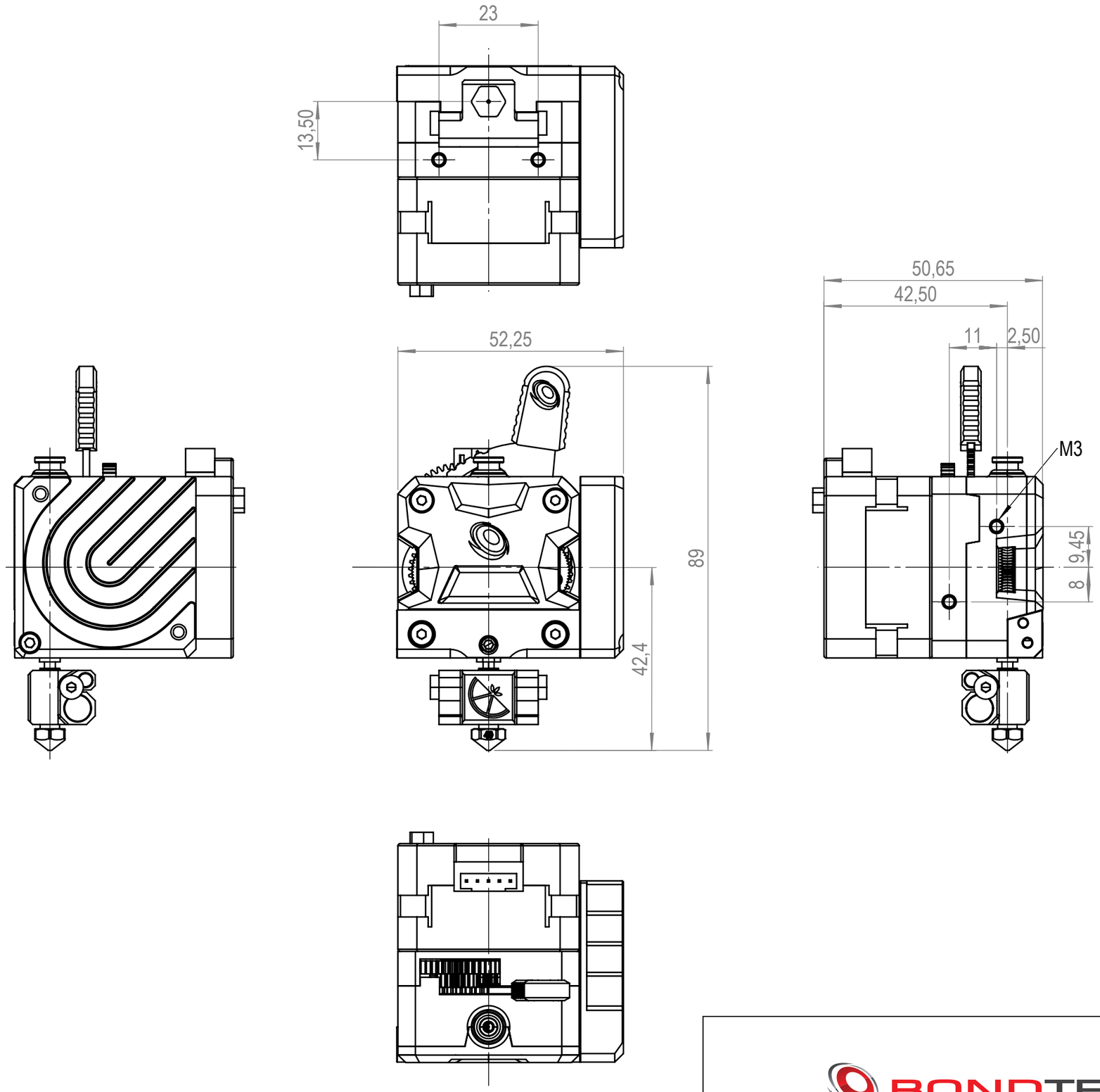

BONDTECH LGX™

DUAL DRIVE TECHNOLOGY **EVOLVED**